Torqseal® 2.0 triple offset valve

Data sheet

Velan's Torqseal® 2.0 triple offset valve is engineered to deliver repeatable full bi-directional zero leakage, lower torques and superior fugitive emissions performance.

Offering a bi-directional zero leakage closure with a metal-to-metal seat, the Torqseal® triple offset valve is the right solution when a tight seal is required. The Torqseal's all metal construction results in an inherently fire-safe design that can stand up to the most demanding services.

NPS 8 (DN 200), Class 300, Torqseal® 2.0 triple offset valve

Specifications

Sizes	NPS 3–96 (DN 80–2400)
Pressure rating	ASME Class 150, 300, and 600
End connections	Lug, double flanged – short pattern and long pattern, and butt weld
Body materials	Standard: WCB and CF8M (also available: LCC, Monel M35, Inconel 625, Hastelloy C, Alloy 20, and Titanium)
Temperature range	Up to 800°F (427°C)

Features

- The Torqseal® advanced design features a triple eccentricity and unique elliptical seat geometry, that allows for friction free, non-rubbing operation of the valve during all of the valve travel.
- Standard laminated resilient disc seal to 800°F (427°C). One to four graphite layers are carefully assembled between stainless steel rings using a phenolic resin bond.
- Zero leakage seat tightness (API 598 resilient seat standard). The resilient metal seal ring radially compresses around it's circumference when torque is evenly applied as the seal ring makes contact with the integral metal body seat.
- The robust centered-weighted splined connection[1] between disc/shaft produces a uniform and repeatable torque transmissionand ensures even distribution of contact pressure between seat and seal.
- Torqseal® valves are dual qualified for API 641 and ISO-15848-1 fugitive emission requirements[2].

Applications

- Steam (saturate & superheated)
- Hydrocarbons
- Hydrogen
- Oxygen
- Hot gases
- Sulphur
- Chlorinated solvents
- Chemical solvents

(1) Splined connection up to 14 NPS (DN 350) and keyed connection 16 NPS (DN 400) and up.
(2) Graphite packed valves are dual qualified up to NPS 24 (DN 600) Class 600.

Design features

① Body

Body wall thickness in accordance with API 600 for higher corrosion allowance.

No cavity body design eliminates solids build-up.

② Shaft

Robust one-piece splined NACE complaint shaft is centered on two hard-faced bearings.

③ Shaft to disc spline connection[1]

Unique centered spline connection ensures a symmetric and homogeneous distribution of the contact pressure between seat and seal resulting in repeatable, reliable sealing performance.

Splines (covering a larger surface) are ideal for the triple offset valve drive-train allowing greater load capacity.

The close-fitting construction of the splines between the disc and shaft minimizes hysteresis.

④ Precision seating

The Torqseal® triple offset valve's conical cone-in-cone seating results in a non-rubbing and repeatable sealing, and ensures little to no wear on the sealing components. The triple offset geometry ensures that the laminated seal ring contacts the body seat only at the final shut-off position, without rubbing or galling. Newly optimized fit-to-body offsets reduce operating torque requirements.

⑤ Seat

Seat is hardfaced with Stellite™ Gr. 21 to maximize durability and wear resistance in normal and severe conditions. Raised conical seat prevents solids build-up from interfering with the seal. Metal-to-metal seating surface, inherently fire safe, meets API 607 7th edition. Integral seat, no leak path.

Seat leakage tested to API 598 and designed to meet API 6D (five-minute test) bi-directional zero leakage[2].

⑥ Packing

All graphite[3] packed valves are dual qualified to API 641 and ISO 15848-1.

⑦ Shaft bearings (pinless design)

The bearings guide the disc allowing it to "float" and find its center in the seat, resulting in repeatable and reliable seat/seal contact.

⑧ Top and bottom shaft bearing protectors

Offered as standard, reducing ingress of particulates in the shaft, eliminating the likelihood of seizing.

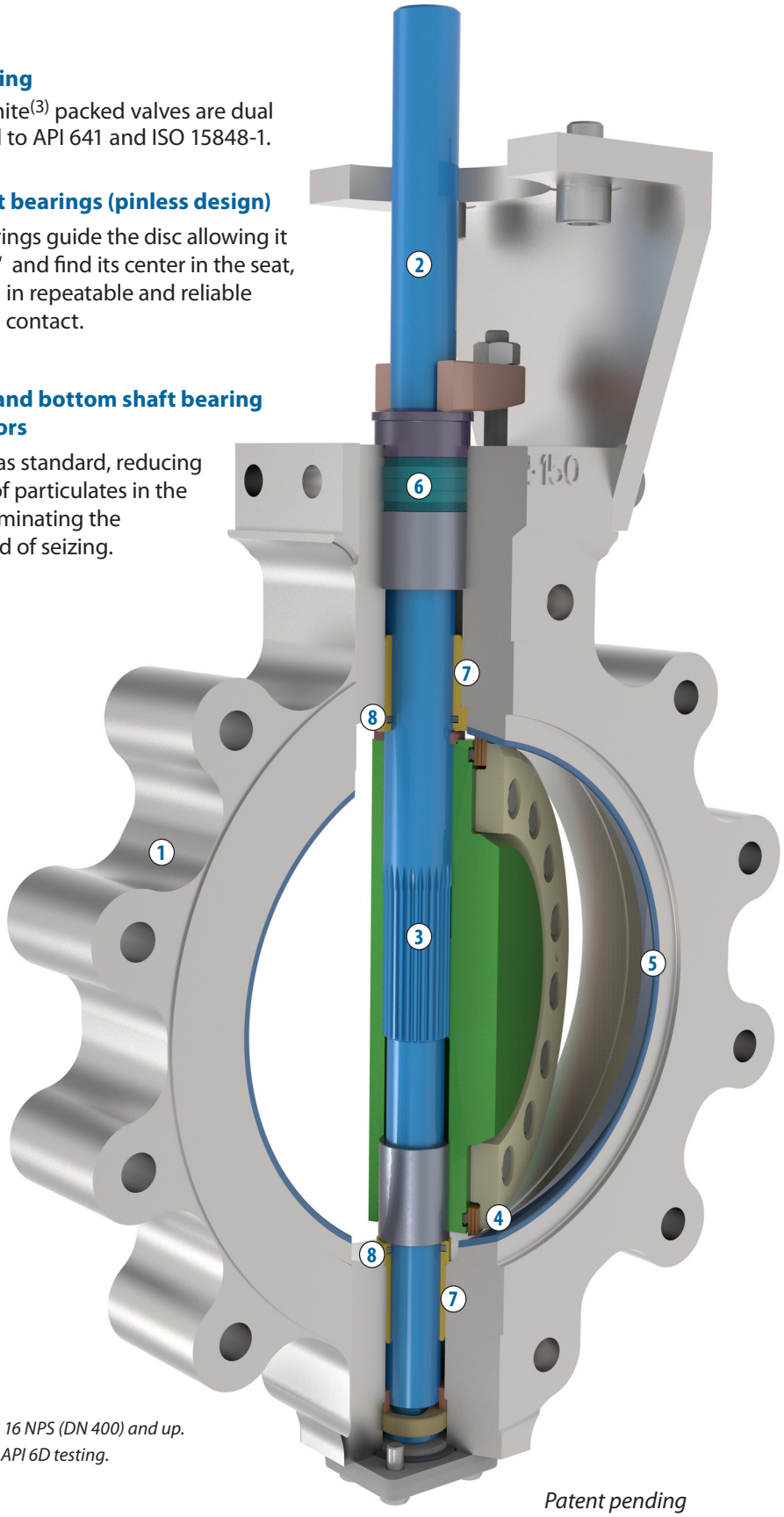

(1) Splined connection up to 14 NPS (DN 350) and keyed connection 16 NPS (DN 400) and up.

(2) According to resilient-seated valves requirements of API 591 and API 6D testing.

(3) Up to NPS 24 (DN 600) 600 Class valves.

Stellite™ is a trademark of Kennametal Inc.

Patent pending

Design features

Self-locking washers

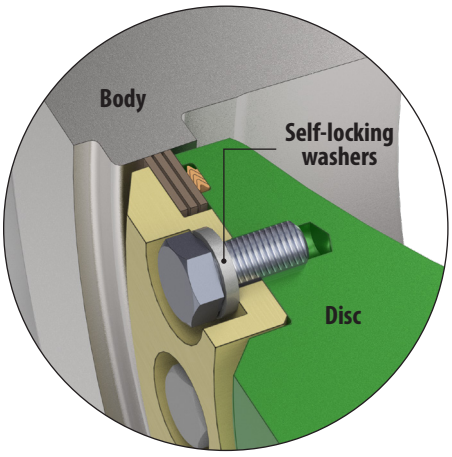

Offered as standard on internal fasteners for increased resistance to vibration and to maintain fastener preload ensuring gasket compression.

Topworks bracket

Outside placement of bolts allows for easy removal of bracket when maintenance is required.

Actuator mounting flange conforms to industry standards (ISO 5211and MSS-SP-101) to facilitate actuation options.

External shaft blowout protection

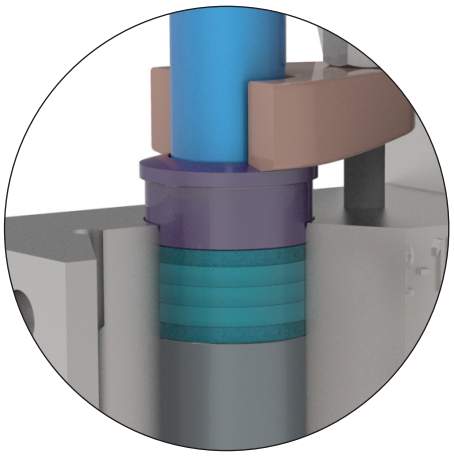

Internal shaft blowout protection

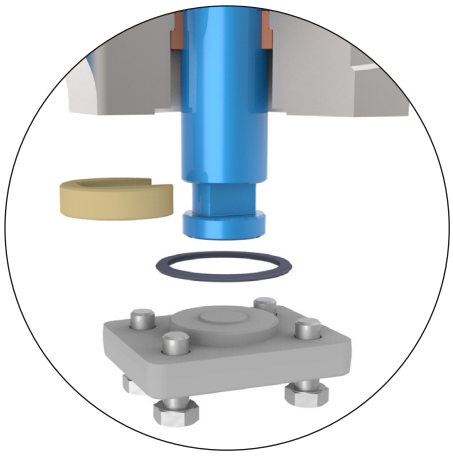

Multiple blowout stem protection fully conforms to API-609 design and safety requirements.

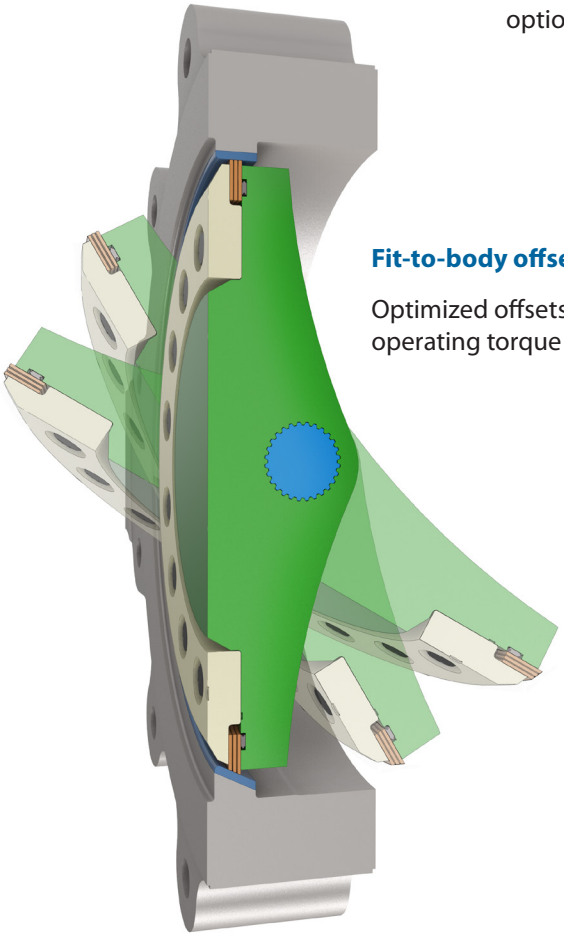

Fit-to-body offsets

Optimized offsets resulting in reduced operating torque requirements.

Disc form[1]

Full profile surrounding the shaft is more streamlined, resulting in better open flow and throttling performance.

Increase of overall stiffness reduces edge deflection under pressure loads.

(1) For sizes up to NPS 14 (DN 350)

Principle of operation

The Velan triple offset valve provides a bi-directional bubble tight shut-off to API 598. This geometry ensures that the disc seal contacts the body seat only at the final shut-off position without rubbing or galling, providing a torque generated resilient seal with sufficient "wedging" to ensure a uniform seal contact.

Triple offset geometry

Offset 1: The shaft is offset behind the seat axis to allow complete sealing contact around the entire seat.

Offset 2: The shaft centerline is offset from the pipe and valve which provides interference free opening and closing of the valve.

Offset 3: The seat cone axis is offset from the shaft centerline to eliminate friction during closing and opening and to achieve uniform compressive sealing around the entire seat.

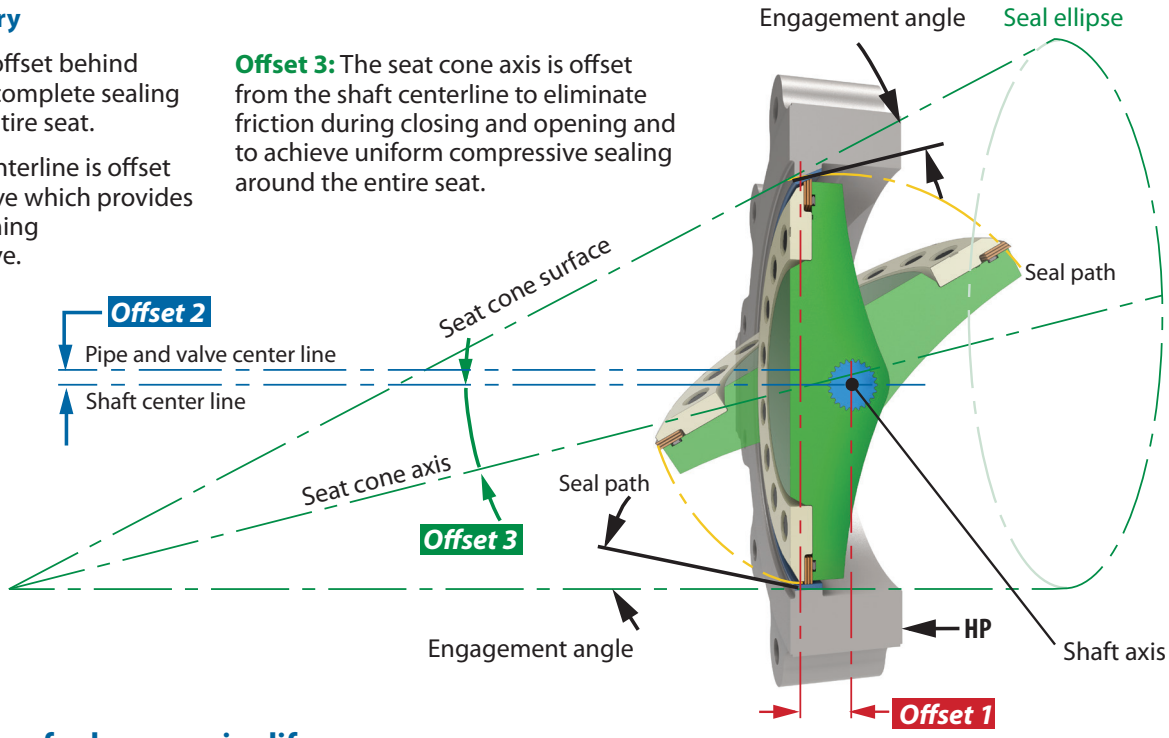

Friction free sealing for long service life

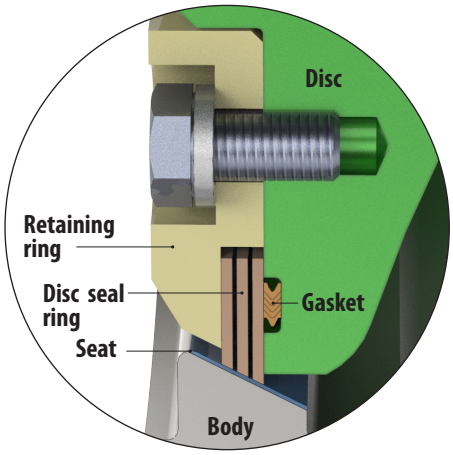

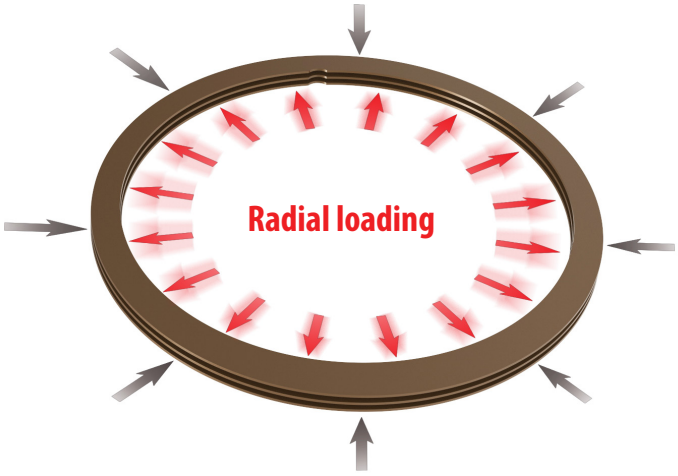

Friction free sealing design

Velan provides an extra rigid retaining ring with bolting, designed in response to ASME stress calculations. The seat is hardfaced with Stellite™ Gr. 21 as standard and the gasket is spiral wound stainless steel Graphite for zero leakage.

Laminated duplex and graphite disc seal ring

Torque seating during closing of the valve provides uniform forces around the entire circumference of the valve seat. The self-adjusting, resilient seal flexes and energizes, assuming the shape of the seat. The compression forces equally distributed around the perimeter provide a tight bi-directional shut-off. The resiliency of the seal allows the valve body and disc to contract or expand, without the risk of jamming due to temperature fluctuations.

A replaceable seal ring that allows quick and easy repair, resulting in minimal downtime.

Options

Live-loading

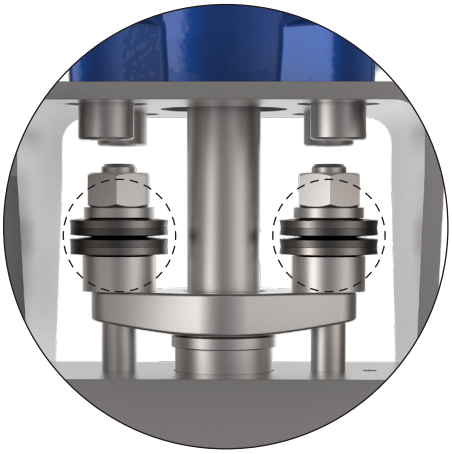

Live-loading available for long maintenance-free service with easy access for packing adjustment.

Steam jackets

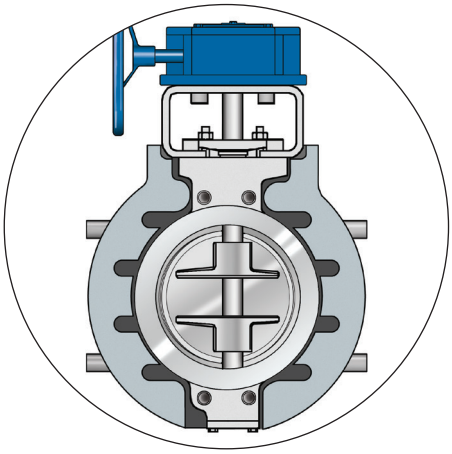

Steam jackets are also available for Torqseal® valves in both the bolt-on and weld-on design. Torqseal® valves with steam jackets are an ideal choice for applications where the media tends to crystallize when cooled down, such as sulphur and other applications.

Air and electric actuators

Velan supplies high quality actuators for pneumatically, electrically and hydraulically operated triple offset valves.

All actuators are totally enclosed. All moving parts are permanently lubricated. Actuators can be installed in the field although it is preferable that they be installed and tested in the factory.

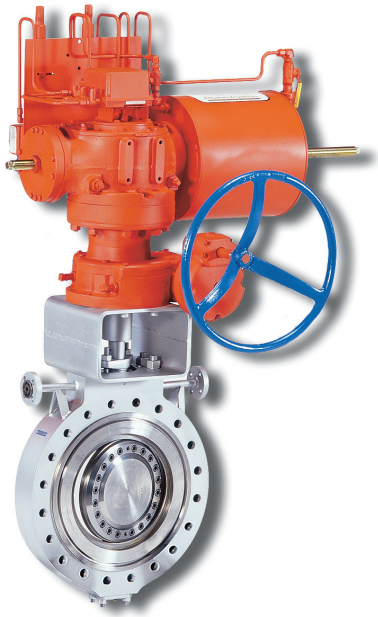

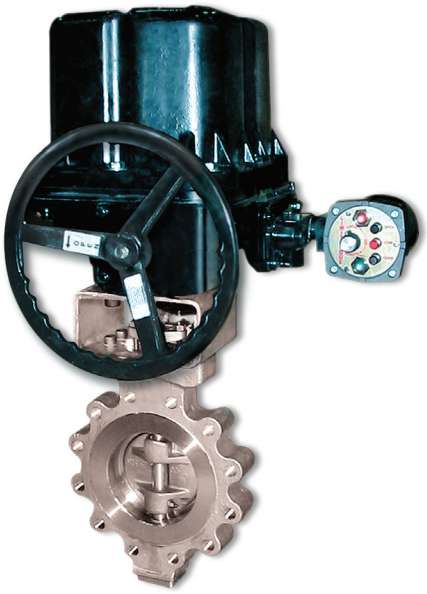

Shaft extensions

Torqseal® valves are available with shaft extension for buried service applications among others.

Chain wheel operators are also available.

Special cleaning

Special cleaning (oxygen, chlorine, etc.) available on all Torqseal® valves.

Please consult the factory for further information.

Applications and control methods

The triple offset design can be used for on/off, throttling, modulating, and dead-end services.

Operation	On/off	
	Throttling	
	Modulating system	
	Dead-end	
Application requirements	Extended service life	
	Low torque	
	Fugitive emissions control	
	Reduced maintenance	
	Bi-directional	
Application range	Size	NPS 3–96 (DN 80–2400)
	Pressure	Class 150–900 (PN 20–150)
	Temperature	–50°F to 1000°F (–46°C to 538°C)
Media	Clean liquids & gases	
	Dirty liquids & gases	
	Steam service	
	Corrosive liquids & gases	
	Hazardous liquids	
	Abrasive slurries(1)	
	Extreme temperature	
	Vacuum service	

Industries

- Oil & Gas
- Refineries
- Hydrocarbons storage & transportation
- Chemical & Petrochemical plants
- Power generation
- Offshore platforms
- Water treatment and distribution

Applications

- Steam (saturate & superheated)
- Hydrocarbons
- Hydrogen
- Oxygen
- Hot gases
- Sulphur
- Chlorinated solvents
- Chemical solvents

(1) Contact Velan for more details.

Certification and approvals

Velan's comprehensive quality program is fully compliant with the most stringent industry standards and has been surveyed by ASME and audited by NUPIC, Northrop Gurmman Newport News, DCMA, utilities, architect/engineers, and other leading organizations from around the world.

Velan holds all major applicable approvals, including:

- ISO 9001: 2015
- PED/CE mark
- ASME N and NPT for Nuclear valves
- Designed and tested to B16.34
- API 609
- API 641/ISO FE
- API 607 (7th edition): 2016
- ISO 10497: 2010
- API 6FA (4th edition): June 2018
- CRN (Canada)


BUREAU VERITAS Certification

VELAN, INC.
HQ: 7007 COTE DE LIESSE
MONTREAL, QUEBEC, H4T 1G2 CANADA

This is a multi-site certificate, additional site(s) are listed on the next page(s)

Bureau Veritas Certification Holding SAS – UK Branch certifies that the Management System of the above organization has been audited and found to be in accordance with the requirements of the management system standards detailed below

ISO 9001:2015

Scope of certification

DESIGN, MANUFACTURE AND DISTRIBUTE CAST OR FORGED STEEL, NICKEL AND NON-FERROUS ALLOYS, GATE, GLOBE, CHECK, BALL, BUTTERFLY, KNIFE, DUAL PLATE CHECK VALVES AND STRAINERS FOR COMMERCIAL INDUSTRIES

Original cycle start date: **May 21 1991**
Certification / Recertification cycle start date: **March 5 2019**
Subject to the continued satisfactory operation of the organization's Management System, this certificate expires on: **March 7 2021**

Certificate No. US017452 Version: 1

Signed for behalf BVCH SAS – UK Branch

Certification body address: 4th Floor, 66 Prescot Street, London E1 8HG, United Kingdom
Local office: 16666 Emmatayna Park Drive, Suite 300E, Houston, TX 77060

Further clarifications regarding the scope of this certificate and the applicability of the management system requirements may be sought by contacting the organization. To check this certificate validity please call: +(888) 237-8311

Page 1 of 2

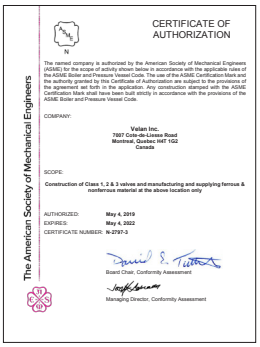
The American Society of Mechanical Engineers

CERTIFICATE OF AUTHORIZATION

N

The named company is authorized by the American Society of Mechanical Engineers (ASME) for the scope of activity shown below in accordance with the applicable rules of the ASME Boiler and Pressure Vessel Code. The use of the ASME Certification Mark and the authority granted by this Certificate of Authorization are subject to the provisions of the agreement set forth in the application. Any construction stamped with the ASME Certification Mark shall have been built strictly in accordance with the provisions of the ASME Boiler and Pressure Vessel Code.

COMPANY:

Velan Inc.
7007 Cote-de-Liesse Road
Montreal, Quebec H4T 1G2
Canada

SCOPE:

Construction of Class 1, 2 & 3 valves and manufacturing and supplying ferrous & nonferrous material at the above location only

AUTHORIZED: **May 4, 2019**
EXPIRES: **May 4, 2022**
CERTIFICATE NUMBER: **N-2797-3**

Board Chair, Conformity Assessment

Managing Director, Conformity Assessment

SIL 3 capable (per IEC 61508)

It is the responsibility of the Safety Instrumented Function (SIF) designer to verify that the selected equipment meets the requirements of the IEC 61508 and IEC 61511 functional safety standards. Verifying a SIF includes reviewing PFDAVG, Architectural Constraints, and SIL Capability. Velan recommends that the SIF designer carefully review all available documentation from the equipment manufacturer and use a commercially available software tools such as exSILentia™ from exida to perform the SIL Verification calculations.

Independent assessment and certification by exida:

- IEC 61508: 2010 Part 1–7
- Systematic Integrity: SIL 3 capable (per IEC 61508).

Assessment and FMEDA reports available at www.exida.com

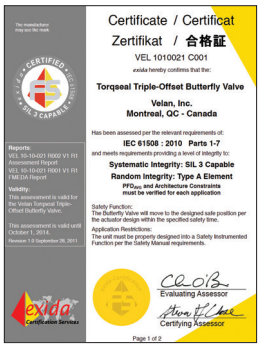
The manufacturer may use the mark

CERTIFIED SIL 3 CAPABLE

Certificate / Certificat
Zertifikat / 合格証
VEL 1010021 C001

exida hereby confirms that the:

Torqseal Triple-Offset Butterfly Valve
Velan, Inc.
Montreal, QC - Canada

Has been assessed per the relevant requirements of:

IEC 61508 : 2010 Parts 1-7

and meets requirements providing a level of integrity to:

Systematic Integrity: SIL 3 Capable
Random Integrity: Type A Element
PFD_{avg} and Architecture Constraints must be verified for each application

Safety Function:
The Butterfly Valve will move to the designed safe position per the actuator design within the specified safety time.

Application Restrictions:
The unit must be properly designed into a Safety Instrumented Function per the Safety Manual requirements.

Reports:
VEL 10-10-021 R002 V1 R1 Assessment Report
VEL 10-10-021 R001 V1 R1 FMEDA Report

Validity:
This assessment is valid for the Velan Torqueal Triple-Offset Butterfly Valve.

This assessment is valid until October 1, 2014.
Revision 1.0 September 28, 2010

exida Certification Services

Evaluating Assessor

Certifying Assessor

Page 1 of 2


VELAN

TORQSEAL™ SAFETY MANUAL

Fire test reports

Velan's NPS 8 (DN 200), Class 150, Torqseal® triple offset 2.0 valve was fire tested at Yarmouth Research and Technology Laboratory. During the initial 30 minute fire burn time, the valve was exposed to flame temperatures of up to 1650°F (900°C).

After the extreme fire burn completion, water jet sprays were used to shock cool the valve, simulating a typical fire fighting scenario. The same valve was then used to repeat the test on the non-preferred direction, doubling the fire test severity.

Velan's Torqseal® 2.0 triple offset valve was fully operable after a double fire test exposer, in both preferred and non-preferred directions.

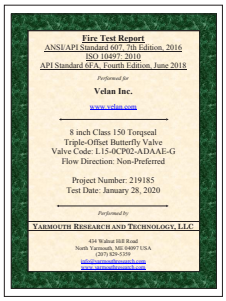
Fire Test Report
ANSI/API Standard 607, 7th Edition, 2016
ISO 10497: 2010
API Standard 6FA, Fourth Edition, June 2018

Performed for

Velan Inc.

www.velan.com

8 inch Class 150 Torqseal
Triple-Offset Butterfly Valve
Valve Code: L15-0CP02-ADAAE-G
Flow Direction: Non-Preferred

Project Number: 219185
Test Date: January 28, 2020

Performed by

YARMOUTH RESEARCH AND TECHNOLOGY, LLC

434 Walton Hill Road
North Yarmouth, ME 04097 USA
(207) 829-2359

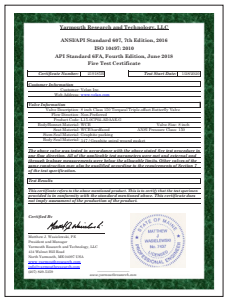
Yarmouth Research and Technology, LLC

ANSI/API Standard 607, 7th Edition, 2016
ISO 10497: 2010
API Standard 6FA, Fourth Edition, June 2018
Fire Test Certificate

Torqseal® 2.0 triple offset valve at 1650°F (900°C).

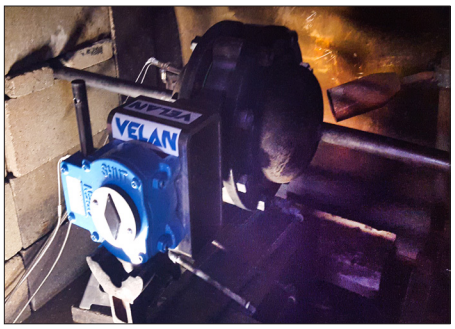

Shock cooled TOV 2.0 after the second fire test.

Exploded view

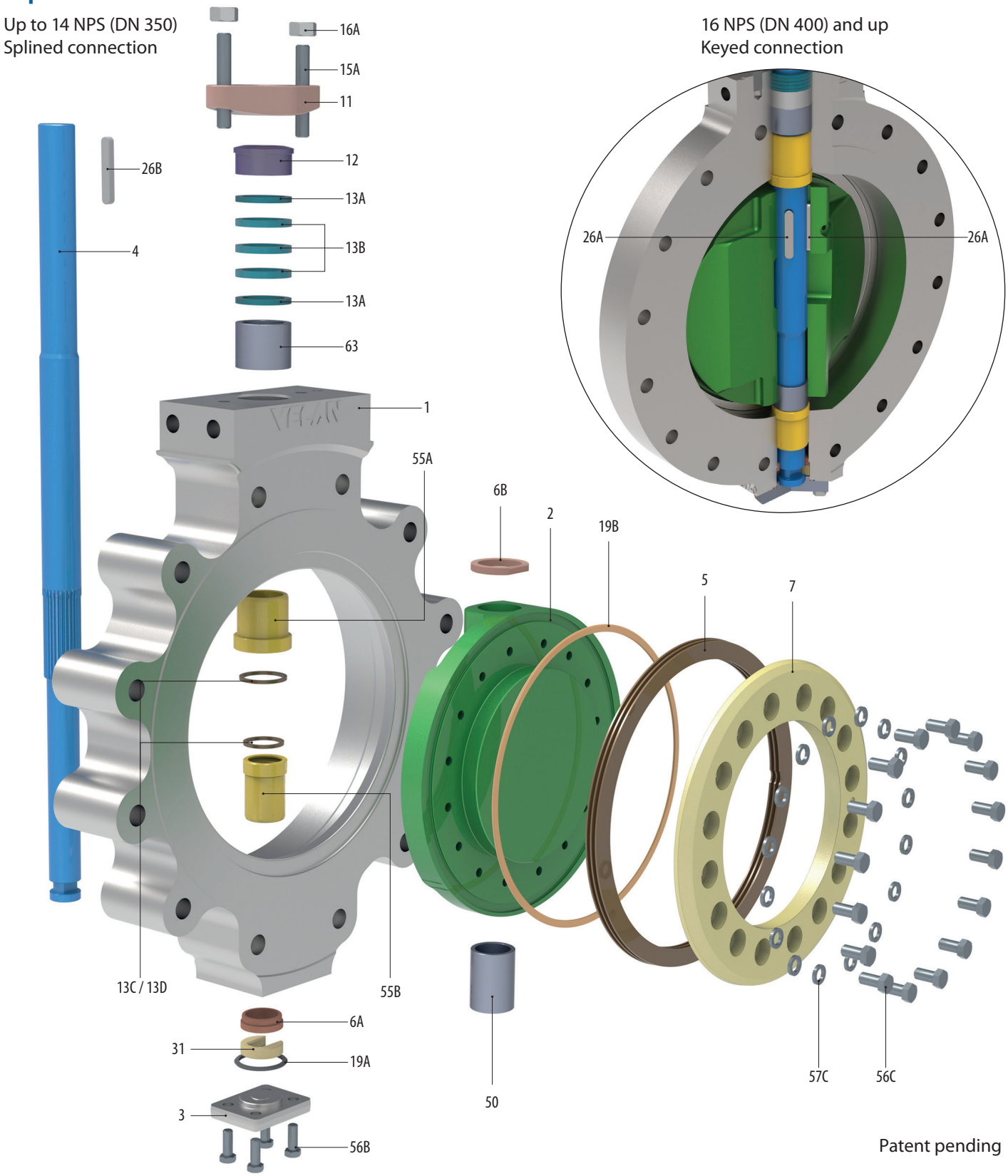

(1) Splined connection up to 14 NPS (DN 350) and keyed connection 16 NPS (DN 400) and up.

Standard materials

PART		Carbon Steel	Stainless Steel[1]	
		P02-ADA2A Up to 800°F (427°C)	P12-DCD2A Up to 600°F (316°C)	P13-DCJ2A Up to 800°F (427°C)
1	Body	ASTM-A216 WCB	Stainless steel ASTM-A351 CF8M	Stainless steel ASTM-A351 CF8M
	Seat (hard facing/weld surfacing)	Stellite™ Gr. 21	Stellite™ Gr. 21	Stellite™ Gr. 21
2	Disc	ASTM-A105/ A216 WCB	Stainless steel ASTM-A182/A351 F316/CF8M	Stainless steel ASTM-A182/A351 F316/CF8M
3	Cover	ASTM-A105/A216 WCB	Stainless steel ASTM-A182 F316	Stainless steel ASTM-A182 F316
4	Shaft	ASTM-A479 SS410 NACE	Stainless steel ASTM-564 SS 630 NACE double hardened H1150D	Stainless steel ASTM-A638 SS 660 hardened NR NACE 35 Rc
5	Laminated seal ring	S31803/graphite/duplex	S31803/graphite/duplex	S31803/graphite/duplex
6A	Thrust washer (body)	ASTM-A479 SS316	Stainless steel ASTM-A479 SS316	Stainless steel ASTM-A479 SS316
6B	Thrust washer (disc)	ASTM-A479 SS316	Stainless steel ASTM-A479 SS316	Stainless steel ASTM-A479 SS316
7	Seal retaining ring	ASTM-A105 (coated)	Duplex ASTM-A182/A995 S32760/J93380	Duplex ASTM-A182/A995 S32760/J93380
11	Packing flange	Carbon steel ASTM-A105 / A516 GR70	Stainless steel ASTM-A182/A351 F316/CF8M	Stainless steel ASTM-A182/A351 F316/CF8M
12	Gland bushing	Stainless steel ASTM-A479 SS304	Stainless steel ASTM-A479 304/316	Stainless steel ASTM-A479 304/316
13A	Packing rings (end)[2]	Graphite braided	Graphite braided	Graphite braided
13B	Packing rings (internal)[2]	Graphite die formed	Graphite die formed	Graphite die formed
13C/13D	Shaft bearing protector (upper & lower)	Graphite braided	Graphite braided	Graphite braided
15A	Studs -packing flange	Alloy steel ASTM-A193 B7	Stainless steel ASTM-A193 B8M Cl.2	Stainless steel ASTM-A193 B8M Cl.2
16A	Nuts-packing flange	Alloy steel ASTM-A194 2H	Stainless steel ASTM-A194 8M	Stainless steel ASTM-A194 8M
17A	Socket head capscrew (bracket)	Alloy steel ASTM-A574	Alloy steel ASTM-A574	Alloy steel ASTM-A574
17C	Socket head capscrew (actuator)	Alloy steel ASTM-A574	Alloy steel ASTM-A574	Alloy steel ASTM-A574
19A	Gasket cover	SS347/Graphite braided	SS347/Graphite braided	SS347/Graphite braided
19B	Gasket disc	SS347/Graphite braided	SS347/Graphite braided	SS347/Graphite braided
26A[3]	Keys (shaft)	ASTM-A479 SS410 NACE	Stainless steel ASTM-564 SS 630 NACE double hardened H1150D	Stainless steel ASTM-A638 SS 660 hardened NR NACE 35 Rc
26B	Keys (actuator)	Alloy steel ASTM-A434 BC	Alloy steel ASTM-A434 BC	Alloy steel ASTM-A434 BC
31	Locking plate	Stainless steel ASTM-A479 SS304	Stainless steel ASTM-A479 SS304	Stainless steel ASTM-A479 SS304
50	Sleeve (disc)	Stainless steel ASTM-A479 SS316	Stainless steel ASTM-A479 SS316	Stainless steel ASTM-A479 SS316
55A/55B	Shaft bearing (shaft upper & lower)	Stainless steel ASTM-A479 SS316 Hardfaced	Stainless steel ASTM-A479 SS316 Hardfaced	Stainless steel ASTM-A479 SS316 Hardfaced
56B	Hex head capscrew (cover)	Stainless steel ASTM-A193 B8M Cl.1	Stainless steel ASTM-A193 B8M Cl.1	Stainless steel ASTM-A193 B8M Cl.1
56C	Hex head capscrew (disc)	Stainless steel ASTM-A193 B8M Cl.2	Stainless steel ASTM-A193 B8M Cl.2	Stainless steel ASTM-A193 B8M Cl.2
57C	Self-locking disc washers	Stainless steel	Stainless steel	Stainless steel
63	Packing spacer	Stainless steel ASTM-A479 SS304	Stainless steel ASTM-A479 SS304	Stainless steel ASTM-A479 SS304
78	Bracket	Carbon steel ASTM-A36/A500/A106	Carbon steel ASTM-A36/A500/A106	Carbon steel ASTM-A36/A500/A106

(1) For applications above 800°F (427°C) contact Velan.
(2) API 641/ISO FE
(3) For keyed connection 16 NPS (DN 400) and up.

Stellite is a trademark of Kennametal.

Design specifications: Lug type

Item	Applicable specification
Wall thickness and general design ≤ NPS 42 in Pressure Class 150 and 300 and ≤ NPS 24 in Pressure Class 600 and greater.	API 600
Wall thickness and general design > NPS 42 in Pressure Class 150 and 300 and > NPS 24 in Pressure Class 600 and greater.	ASME B16.34 plus additional allowance
Pressure-temperature rating	ASME B16.34
Face-to-face dimensions	NPS 3-24: API-609 Table 3A >NPS 24: as per Velan's standard or per request
Flange design	NPS 3–24: ANSI B16.5 NPS 26–60: ANSI B16.47 series A or B > NPS 60: ASME VIII div.1 Appendix 2 Other flanges standards available upon request
Materials	ASTM

Dimensions and weight: Lug type

Size NPS DN	ASME 150						
	A	D	F	G	H	lb / kg	
						Bare Shaft(1)	Actuator(2)
3 80	5.36 136	1.88 48	5.15 131	10.38 264	8 203	29 13	39 18
4 100	6.21 158	2.12 54	5.96 151	11.23 285	8 203	37 17	47 21
6 150	7.93 201	2.25 57	7.98 203	12.95 329	8 203	57 26	67 30
8 200	8.86 225	2.50 64	8.37 213	14.12 359	12 305	85 39	102 46
10 250	9.75 248	2.81 71	9.98 253	16.17 411	16 406	126 57	154 70
12 300	11.44 291	3.19 81	10.96 278	18.45 469	20 508	192 87	221 100
14 350	12.47 317	3.62 92	11.96 304	20.48 520	20 508	262 119	297 135
16 400	13.82 351	4 102	13.45 342	21.96 558	20 508	443 201	636 289
18 450	15.41 391	4.5 114	15.07 383	25.52 648	16 406	577 262	694 315
20 500	16.65 423	5 127	16.17 411	25.01 635	20 508	758 345	913 415
24 600	20.65 525	6.06 154	19.25 489	31.09 790	20 508	1211 550	1406 639
30 750	25.01 635	8 203	23.41 595	37.3 947	20 508	2402 1092	2793 1270
36 900	29.5 749	9 229	27.65 702	42.34 1075	24 610	3657 1662	4307 1958

Size NPS DN	ASME 300						
	A	D	F	G	H	lb / kg	
						Bare Shaft(1)	Actuator(2)
3 80	5.36 136	1.88 48	5.22 133	10.38 264	8 203	31 14	41 19
4 100	6.21 158	2.12 54	5.96 151	11.23 285	8 203	50 23	60 27
6 150	7.93 201	2.31 59	7.98 203	13.19 335	12 305	80 36	97 44
8 200	9.56 243	2.88 73	9.09 231	16.13 410	20 508	142 65	176 80
10 250	10.77 274	3.25 83	10.11 257	18.6 472	24 610	201 91	274 125
12 300	12.5 318	3.62 92	12.31 313	20.64 524	20 508	318 145	394 179
14 350	13.41 341	4.62 117	13.06 332	21.52 547	16 406	488 222	600 273
16 400	14.78 375	5.25 133	14.29 363	23.14 588	20 508	659 300	815 370
18 450	16.67 423	5.88 149	15.93 405	27.11 689	20 508	901 410	1095 498
20 500	18.51 470	6.25 159	17.12 435	29.6 752	20 508	1153 524	1363 620
24 600	21.76 553	7.12 181	19.95 507	33.05 839	24 610	1758 799	2147 976

(1) Bare Stem B16.5 / B16.47 Series A

(2) Standard actuator and top works combined weight

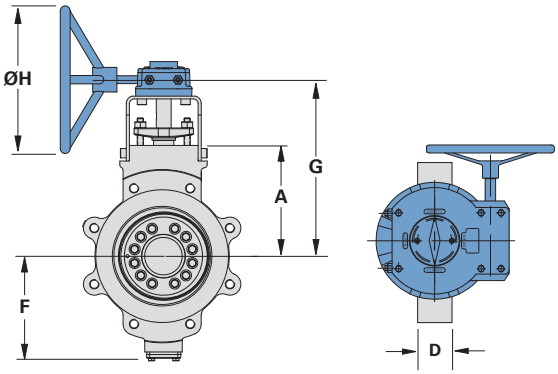

A = Center-to-body top
D = End-to-end
F = Center-to-bottom
G = Center-to-top (shaft)
ØH = Handwheel

Design specifications: Short pattern type

Item	Applicable specification
Wall thickness and general design ≤ NPS 42 in Pressure Class 150 and 300 and ≤ NPS 24 in Pressure Class 600 and greater.	API 600
Wall thickness and general design > NPS 42 in Pressure Class 150 and 300 and > NPS 24 in Pressure Class 600 and greater.	ASME B16.34 plus additional allowance
Pressure-temperature rating	ASME B16.34
Face-to-face dimensions	API-609 Table 3C NPS 3–48 in Pressure Class 150: ISO 5752 Series 13 NPS 3–48 in Class 300: ISO 5752 Series 13 NPS 3–24 in Class 600: ISO 5752 Series 14 NPS 30 and 36 in Class 300: Option ISO 5752 series 14
Flange design	NPS 3–24: ANSI B16.5 NPS 26–60: ANSI B16.47 series A or B > NPS 60: ASME VIII div.1 Appendix 2 Other flanges standards available upon request
Materials	ASTM

Dimensions and weight: Short pattern type

Size NPS DN	ASME 150						
	A	D	F	G	H	lb / kg	
						Bare Shaft(1)	Actuator(2)
3 80	5.36 136	4.50 114	5.15 131	10.38 264	8 203	36 16	46 21
4 100	6.21 158	5 127	5.96 151	11.23 285	8 203	61 28	71 32
6 150	7.93 201	5.50 140	7.98 203	12.95 329	8 203	86 39	96 44
8 200	8.86 225	6 152	8.37 213	14.12 359	12 305	127 58	144 65
10 250	9.75 248	6.50 165	9.98 253	16.17 411	16 406	180 82	208 95
12 300	11.44 291	7 178	10.96 278	18.45 469	20 508	281 128	310 141
14 350	12.47 317	7.50 190	11.96 304	20.48 520	20 508	355 161	390 177
16 400	13.82 351	8.5 216	13.45 342	21.96 558	20 508	478 217	671 305
18 450	15.41 391	8.75 222	15.07 383	25.52 648	16 406	605 275	722 328
20 500	16.65 423	9 229	16.17 411	25.01 635	20 508	790 359	945 430
24 600	20.65 525	10.5 267	19.25 489	31.09 790	20 508	1176 535	1371 623
30 750	25.01 635	12.52 318	23.41 595	37.3 947	20 508	2326 1057	2717 1235
36 900	29.5 749	12.99 330	27.65 702	42.34 1075	24 610	3451 1569	4101 1864

Size NPS DN	ASME 300						
	A	D	F	G	H	lb / kg	
						Bare Shaft(1)	Actuator(2)
3 80	5.36 136	4.50 114	5.22 133	10.38 264	8 203	45 20	55 25
4 100	6.21 158	5 127	5.96 151	11.23 285	8 203	74 34	84 38
6 150	7.93 201	5.50 140	7.98 203	13.19 335	12 305	122 55	139 63
8 200	9.56 243	6 152	9.09 231	16.13 410	20 508	189 86	223 101
10 250	10.77 274	6.50 165	10.11 257	18.6 472	24 610	268 122	341 155
12 300	12.5 318	7 178	12.31 313	20.64 524	20 508	401 182	477 217
14 350	13.41 341	7.50 190	13.06 332	21.52 547	16 406	535 243	647 294
16 400	14.78 375	8.50 216	14.29 363	23.14 588	20 508	705 320	861 391
18 450	16.67 423	8.75 222	15.93 405	27.11 689	20 508	955 434	1149 522
20 500	18.51 470	9 229	17.12 435	29.6 752	20 508	1141 519	1351 614
24 600	21.76 553	10.5 267	19.95 507	33.05 839	24 610	1718 781	2107 958

(1) Bare Stem B16.5 / B16.47 Series A

(2) Standard actuator and top works combined weight

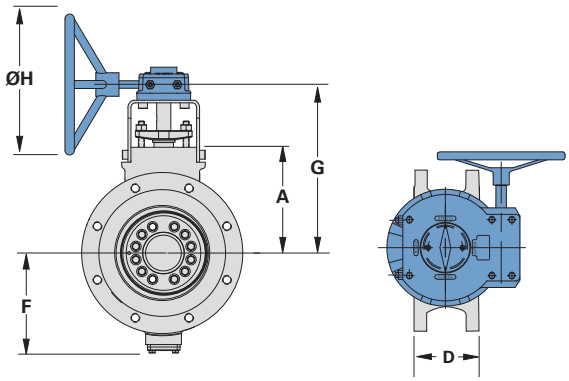

A = Center-to-body top
D = End-to-end
F = Center-to-bottom
G = Center-to-top (shaft)
ØH = Handwheel

Design specifications: Long pattern type

Item	Applicable specification
Wall thickness and general design ≤ NPS 42 in Pressure Class 150 and 300 and ≤ NPS 24 in Pressure Class 600 and greater.	API 600
Wall thickness and general design > NPS 42 in Pressure Class 150 and 300 and > NPS 24 in Pressure Class 600 and greater.	ASME B16.34 plus additional allowance
Pressure-temperature rating	ASME B16.34
Face-to-face dimensions	NPS 3-36: API-609 Table 3B / ASME B16.10 flanged gate valves
Flange design	NPS 3–24: ANSI B16.5 NPS 26–60: ANSI B16.47 series A or B > NPS 60: ASME VIII div.1 Appendix 2 Other flanges standards available upon request.
Materials	ASTM

Dimensions and weight: Long pattern type

Size NPS DN	ASME 150						
	A	D	F	G	H	lb / kg	
						Bare Shaft(1)	Actuator(2)
3 80	5.36 136	8 203	5.15 131	10.38 264	8 203	41 19	51 23
4 100	6.21 158	9 229	5.96 151	11.23 285	8 203	68 31	78 35
6 150	7.93 201	10.50 267	7.98 203	12.95 329	8 203	98 45	108 49
8 200	8.86 225	11.50 292	8.37 213	14.12 359	12 305	147 67	164 75
10 250	9.75 248	13 330	9.98 253	16.17 411	16 406	212 96	240 109
12 300	11.44 291	14 356	10.96 278	18.45 469	20 508	327 149	356 162
14 350	12.47 317	15 381	11.96 304	20.48 520	20 508	414 188	449 204
16 400	13.82 351	16 406	13.45 342	21.96 558	20 508	546 248	739 336
18 450	15.41 391	17 432	15.07 383	25.52 648	16 406	701 319	818 372
20 500	16.65 423	18 457	16.17 411	25.01 635	20 508	913 415	1068 485
24 600	20.65 525	20 508	19.25 489	31.09 790	20 508	1340 609	1535 698
30 750	25.01 635	24 610	23.41 595	37.3 947	20 508	2617 1188	3008 1366
36 900	29.5 749	28 711	27.65 702	42.34 1075	24 610	3950 1792	4600 2087

Size NPS DN	ASME 300						
	A	D	F	G	H	lb / kg	
						Bare Shaft(1)	Actuator(2)
3 80	5.36 136	11.12 282	5.22 133	10.38 264	8 203	55 25	65 30
4 100	6.21 158	12 305	5.96 151	11.23 285	8 203	88 40	98 45
6 150	7.93 201	15.88 403	7.98 203	13.19 335	12 305	162 74	179 81
8 200	9.56 243	16.50 418	9.09 231	16.13 410	20 508	246 112	280 127
10 250	10.77 274	18 457	10.11 257	18.6 472	24 610	353 160	426 194
12 300	12.5 318	19.75 502	12.31 313	20.64 524	20 508	523 238	599 272
14 350	13.41 341	30 762	13.06 332	21.52 547	16 406	794 361	906 412
16 400	14.78 375	33 838	14.29 363	23.14 588	20 508	1046 475	1202 546
18 450	16.67 423	36 914	15.93 405	27.11 689	20 508	1349 613	1543 701
20 500	18.51 470	39 991	17.12 435	29.6 752	20 508	1728 785	1938 881
24 600	21.76 553	45 1143	19.95 507	33.05 839	24 610	2630 1195	3019 1372

(1) Bare Stem B16.5 / B16.47 Series A

(2) Standard actuator and top works combined weight

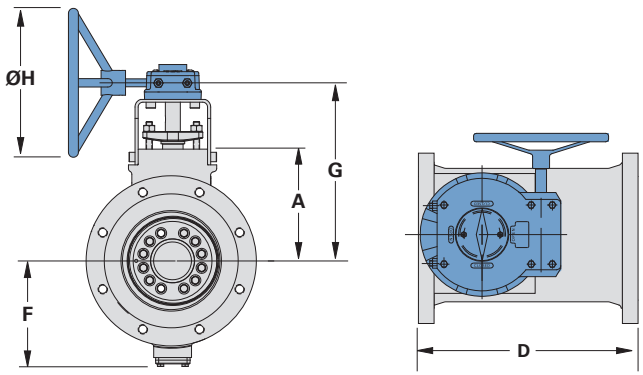

A = Center-to-body top
D = End-to-end
F = Center-to-bottom
G = Center-to-top (shaft)
ØH = Handwheel

Design specifications: Butt weld type

Item	Applicable specification
Wall thickness and general design ≤ NPS 42 in Pressure Class 150 and 300 and ≤ NPS 24 in Pressure Class 600 and greater.	API 600
Wall thickness and general design > NPS 42 in Pressure Class 150 and 300 and > NPS 24 in Pressure Class 600 and greater.	ASME B16.34 plus additional allowance
Pressure-temperature rating	ASME B16.34
Face-to-face dimensions	as per Velan's standard or per request
Butt welding design	ASME B16.25
Materials	ASTM

Dimensions and weight: Butt weld type

Size NPS DN	ASME 150						
	A	D	F	G	H	lb / kg	
						Bare Shaft(2)	Actuator(3)
4 100	6.21 158	7.5 191	5.78 147	11.31 287	7.87 200	53 24	20 9
6 150	7.93 201	8.88 225	7.54 192	13.27 337	11.81 300	110 50	30 14
8 200	9.56 243	9.94 252	9.29 236	15.21 386	19.69 500	178 81	50 23
10 250	10.77 274	12 305	10.29 261	18.66 474	23.62 600	291 132	75 34
12 300	12.09 307	13.63 346	11.69 297	20.26 514	23.62 600	378 172	130 59
14 350	13.41 341	14.31 364	13.01 330	21.58 548	19.69 500	623 283	165 75
16 400	14.78 375	16 406	14.23 361	23.1 587	19.69 500	906 411	215 98
18 450	16.59 421	17.19 437	16.04 407	24.91 633	23.62 600	1132 514	240 109
20 500	18.51 470	18.69 475	17.36 441	26.83 682	23.62 600	1424 646	450 204
24 600	21.76 553	20.75 527	20.11 511	34.11 866	23.62 600	2402 1091	570 259

Size NPS DN	ASME 300						
	A	D	F	G	H	lb / kg	
						Bare Shaft(1)	Actuator(2)
4 100	6.21 158	7.5 191	5.78 147	11.31 287	7.87 200	53 24	20 9
6 150	7.93 201	8.88 225	7.54 192	13.27 337	11.81 300	110 50	30 14
8 200	9.56 243	9.94 252	9.29 236	15.21 386	19.69 500	178 81	50 23
10 250	10.77 274	12 305	10.29 261	18.66 474	23.62 600	291 132	75 34
12 300	12.09 307	13.63 346	11.69 297	20.26 514	23.62 600	378 172	130 59
14 350	13.41 341	14.31 364	13.01 330	21.58 548	19.69 500	623 283	165 75
16 400	14.78 375	16 406	14.23 361	23.1 587	19.69 500	906 411	215 98
18 450	16.59 421	17.19 437	16.04 407	24.91 633	23.62 600	1132 514	240 109
20 500	18.51 470	18.69 475	17.36 441	26.83 682	23.62 600	1424 646	450 204
24 600	21.76 553	20.75 527	20.11 511	34.11 866	23.62 600	2402 1091	570 259

(1) Bare Stem B16.5 / B16.47 Series A

(2) Standard actuator and top works combined weight

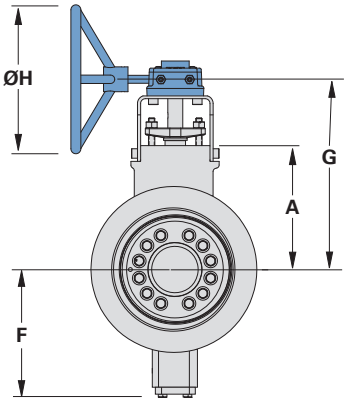

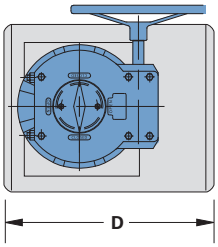

A = Center-to-body top
D = End-to-end
F = Center-to-bottom
G = Center-to-top (shaft)
ØH = Handwheel

Torque charts

ASME 150

Size NPS	Preferred direction – ft•lb										
	ISO/MSS	RUN (1)	Maximum differential pressure						MAST shaft material		
			6 bar (80 psi)		10 bar (150 psi)		20 bar (290 psi)		SS 410	SS 660	SS 630
			BTO(2)	ETC(3)	BTO(2)	ETC(3)	BTO(2)	ETC(3)			
3	FA10	19	37	52	43	54	55	64	256	229	283
4	FA10	30	58	82	70	87	94	106	629	563	695
6	FA10	35	72	130	97	141	147	182	629	563	695
8	FA12	70	115	249	161	269	253	350	1391	1244	1537
10	FA14	96	177	317	266	353	442	558	1760	1575	1946
12	FA14	151	286	466	430	522	719	821	2060	1843	2277
14	FA16	208	387	543	582	621	971	970	3587	3209	3964
16	FA16	267	369	594	579	676	998	1088	5022	4494	5551
18	FA19	384	524	784	816	901	1400	1441	7675	6868	8483
20	FA25	507	712	1016	1131	1182	1967	1909	9598	8588	10608
24	FA30	1001	1363	1724	2113	2020	3611	3198	17636	15780	19493
30	FA35	1937	2666	3402	4211	4032	7301	6480	40640	36362	44918
36	FA40	2979	4260	4980	6876	6034	12107	9813	70952	63484	78421

ASME 300

Size NPS	Preferred direction – ft•lb										
	ISO/MSS	RUN (1)	Maximum differential pressure						MAST shaft material		
			25 bar (362 psi)		37.5 bar (550 psi)		50 bar (725 psi)		SS 410	SS 660	SS 630
			BTO(2)	ETC(3)	BTO(2)	ETC(3)	BTO(2)	ETC(3)			
3	FA10	22	62	93	78	99	94	115	256	229	283
4	FA10	36	107	155	140	169	171	199	629	563	695
6	FA12	49	172	291	239	322	301	389	629	563	695
8	FA14	119	323	612	452	672	571	815	1760	1575	1946
10	FA16	200	594	839	840	1059	1069	1358	2060	1843	2277
12	FA16	367	1058	1328	1496	1689	1903	2159	5022	4494	5551
14	FA19	480	1394	1539	1977	1974	2519	2516	7675	6868	8483
16	FA25	660	1425	1725	2043	2215	2619	2846	9598	8588	10608
18	FA30	1020	2070	2354	2924	3001	3719	3820	13594	12163	15025
20	FA30	1330	2841	3067	4053	3942	5181	5036	17636	15780	19493
24	FA35	1899	4598	4527	6677	5893	8612	7579	21935	19626	24244
30	FA40	4305	9871	10491	14338	13690	18496	17642	70952	63484	78421
36	FA48	6612	16091	15541	23564	20492	30520	26470	117842	105438	130246

(1) RUN torque is the maximum operating torque to open and close the valve between 0-90° for process flows up to 15 ft/s for liquids and 150 ft/s for gases.

(2) BTO = Break-to-open

(3) ETC = End-to-close

Note: For process conditions outside of this range please contact Velan Applications Engineering.

Torque charts

PN 20

Size DN	Preferred direction – Nm										
	ISO/MSS	RUN (1)	Maximum differential pressure						MAST shaft material		
			6 bar (80 psi)		10 bar (150 psi)		20 bar (290 psi)		SS 410	SS 660	SS 630
			BTO(2)	ETC(3)	BTO(2)	ETC(3)	BTO(2)	ETC(3)			
80	FA10	26	50	70	58	74	75	86	347	310	383
100	FA10	40	78	111	95	118	128	143	853	763	943
150	FA10	47	98	176	131	191	199	247	853	763	943
200	FA12	94	156	338	218	365	343	475	1885	1687	2084
250	FA14	131	240	429	360	478	600	756	2387	2136	2638
300	FA14	205	387	632	583	708	975	1114	2793	2499	3087
350	FA16	282	524	737	789	842	1317	1315	4863	4351	5375
400	FA16	362	500	805	785	917	1353	1476	6810	6093	7526
450	FA19	520	710	1063	1106	1221	1899	1953	10407	9311	11502
500	FA25	687	966	1378	1533	1603	2667	2588	13013	11643	14383
600	FA30	1357	1848	2338	2864	2739	4896	4336	23911	21394	26428
750	FA35	2626	3615	4612	5709	5467	9899	8786	55100	49300	60900
900	FA40	4039	5775	6752	9322	8181	16416	13304	96198	86072	106324

PN 50

Size DN	Preferred direction – Nm										
	ISO/MSS	RUN (1)	Maximum differential pressure						MAST shaft material		
			25 bar (362 psi)		37.5 bar (550 psi)		50 bar (725 psi)		SS 410	SS 660	SS 630
			BTO(2)	ETC(3)	BTO(2)	ETC(3)	BTO(2)	ETC(3)			
80	FA10	30	84	126	106	134	127	156	347	310	383
100	FA10	49	145	210	190	229	232	270	853	763	943
150	FA12	67	233	395	324	436	408	528	853	763	943
200	FA14	161	438	830	612	911	774	1105	2387	2136	2638
250	FA16	271	806	1138	1139	1436	1450	1841	2793	2499	3087
300	FA16	497	1434	1800	2028	2290	2581	2927	6810	6093	7526
350	FA19	651	1890	2087	2680	2677	3416	3411	10407	9311	11502
400	FA25	895	1932	2339	2771	3004	3551	3858	13013	11643	14383
450	FA30	1383	2807	3191	3965	4069	5043	5180	18432	16491	20372
500	FA30	1804	3851	4159	5495	5345	7025	6827	23911	21394	26428
600	FA35	2574	6234	6137	9053	7990	11676	10275	29740	26609	32870
750	FA40	5837	13383	14224	19439	18562	25077	23920	96198	86072	106324
900	FA48	8965	21817	21071	31949	27783	41380	35888	159772	142954	176590

(1) RUN torque is the maximum operating torque to open and close the valve between 0-90° for process flows up to 4.5 m/s for liquids and 45 m/s for gases.

(2) BTO = Break-to-open

(3) ETC = End-to-close

Note: For process conditions outside of this range please contact Velan Applications Engineering.

Torque charts

ASME 150

Size NPS	Bi-directional – ft•lb										
	ISO/MSS	RUN (1)	Maximum differential pressure						MAST shaft material		
			6 bar (80 psi)		10 bar (150 psi)		20 bar (290 psi)		SS 410	SS 660	SS 630
			BTO(2)	ETC(3)	BTO(2)	ETC(3)	BTO(2)	ETC(3)			
3	FA10	19	37	53	43	57	55	69	256	229	283
4	FA10	30	58	86	70	94	94	119	629	563	695
6	FA10	35	72	136	97	152	147	204	629	563	695
8	FA12	70	115	258	161	286	253	382	1391	1244	1537
10	FA14	96	177	344	266	403	442	655	1760	1575	1946
12	FA14	151	286	521	430	625	719	1021	2060	1843	2277
14	FA16	208	387	630	582	784	971	1285	3587	3209	3964
16	FA16	267	369	679	579	836	998	1396	5022	4494	5551
18	FA19	384	524	910	816	1136	1400	1896	7675	6868	8483
20	FA25	507	712	1208	1131	1541	1967	2603	9598	8588	10608
24	FA30	1001	1363	2100	2113	2725	3611	4561	17636	15780	19493
30	FA35	1937	2666	4156	4211	5446	7301	9214	40640	36362	44918
36	FA40	2979	4260	6360	6876	8621	12107	14813	70952	63484	78421

ASME 300

Size NPS	Bi-directional – ft•lb										
	ISO/MSS	RUN (1)	Maximum differential pressure						MAST shaft material		
			25 bar (362 psi)		37.5 bar (550 psi)		50 bar (725 psi)		SS 410	SS 660	SS 630
			BTO(2)	ETC(3)	BTO(2)	ETC(3)	BTO(2)	ETC(3)			
3	FA10	22	62	99	78	109	94	129	256	229	283
4	FA10	36	107	171	140	193	171	231	629	563	695
6	FA12	49	172	319	239	363	301	444	629	563	695
8	FA14	119	323	652	452	732	571	894	1760	1575	1946
10	FA16	200	594	961	840	1244	1069	1601	2060	1843	2277
12	FA16	367	1058	1573	1496	2061	1903	2649	5022	4494	5551
14	FA19	480	1394	1928	1977	2565	2519	3295	7675	6868	8483
16	FA25	660	1425	2105	2043	2792	2619	3606	9598	8588	10608
18	FA30	1020	2070	2922	2924	3864	3719	4958	13594	12163	15025
20	FA30	1330	2841	3934	4053	5259	5181	6772	17636	15780	19493
24	FA35	1899	4598	6228	6677	8478	8612	10986	21935	19626	24244
30	FA40	4305	9871	13691	14338	18552	18496	24051	70952	63484	78421
36	FA48	6612	16091	21486	23564	29524	30520	38377	117842	105438	130246

(1) RUN torque is the maximum operating torque to open and close the valve between 0-90° for process flows up to 15 ft/s for liquids and 150 ft/s for gases.

(2) BTO = Break-to-open

(3) ETC = End-to-close

Note: For process conditions outside of this range please contact Velan Applications Engineering.

Torque charts

PN 20

Size DN	Bi-directional – Nm										
	ISO/MSS	RUN (1)	Maximum differential pressure						MAST shaft material		
			6 bar (80 psi)		10 bar (150 psi)		20 bar (290 psi)		SS 410	SS 660	SS 630
			BTO(2)	ETC(3)	BTO(2)	ETC(3)	BTO(2)	ETC(3)			
80	FA10	26	50	72	58	77	75	94	347	310	383
100	FA10	40	78	116	95	127	128	161	853	763	943
150	FA10	47	98	184	131	207	199	276	853	763	943
200	FA12	94	156	350	218	387	343	518	1885	1687	2084
250	FA14	131	240	466	360	546	600	888	2387	2136	2638
300	FA14	205	387	707	583	848	975	1384	2793	2499	3087
350	FA16	282	524	855	789	1063	1317	1742	4863	4351	5375
400	FA16	362	500	920	785	1133	1353	1893	6810	6093	7526
450	FA19	520	710	1233	1106	1540	1899	2571	10407	9311	11502
500	FA25	687	966	1637	1533	2090	2667	3529	13013	11643	14383
600	FA30	1357	1848	2848	2864	3695	4896	6184	23911	21394	26428
750	FA35	2626	3615	5635	5709	7384	9899	12493	55100	49300	60900
900	FA40	4039	5775	8623	9322	11688	16416	20084	96198	86072	106324

PN 50

Size DN	Bi-directional – Nm										
	ISO/MSS	RUN (1)	Maximum differential pressure						MAST shaft material		
			25 bar (362 psi)		37.5 bar (550 psi)		50 bar (725 psi)		SS 410	SS 660	SS 630
			BTO(2)	ETC(3)	BTO(2)	ETC(3)	BTO(2)	ETC(3)			
80	FA10	30	84	135	106	148	127	175	347	310	383
100	FA10	49	145	232	190	262	232	314	853	763	943
150	FA12	67	233	432	324	493	408	603	853	763	943
200	FA14	161	438	884	612	992	774	1212	2387	2136	2638
250	FA16	271	806	1303	1139	1687	1450	2171	2793	2499	3087
300	FA16	497	1434	2132	2028	2795	2581	3591	6810	6093	7526
350	FA19	651	1890	2614	2680	3478	3416	4468	10407	9311	11502
400	FA25	895	1932	2854	2771	3786	3551	4889	13013	11643	14383
450	FA30	1383	2807	3962	3965	5239	5043	6723	18432	16491	20372
500	FA30	1804	3851	5334	5495	7131	7025	9181	23911	21394	26428
600	FA35	2574	6234	8444	9053	11494	11676	14895	29740	26609	32870
750	FA40	5837	13383	18562	19439	25153	25077	32609	96198	86072	106324
900	FA48	8965	21817	29132	31949	40030	41380	52032	159772	142954	176590

(1) RUN torque is the maximum operating torque to open and close the valve between 0-90° for process flows up to 4.5 m/s for liquids and 45 m/s for gases.

(2) BTO = Break-to-open

(3) ETC = End-to-close

Note: For process conditions outside of this range please contact Velan Applications Engineering.

Flow coefficient (Cv/Kv)

Size NPS DN	Class 150	Class 300	Class 600
3 80	95 81	95 81	–
4 100	210 180	210 180	195 167
6 150	605 518	605 518	565 484
8 200	1440 1233	1210 1036	1040 891
10 250	2345 2009	2185 1872	1605 1375
12 300	3795 3251	3405 2916	2435 2086
14 350	4940 4231	4565 3910	3250 2784
16 400	6530 5593	6120 5242	4485 3842
18 450	8795 7533	8195 7019	5810 4976
20 500	11150 9550	10900 9336	7950 6809
24 600	18000 15418	16000 13704	12105 10368
28 650	25000 21413	24000 20557	–
30 750	29500 25268	28500 24411	22000 18844
36 900	43500 37259	42000 35974	31500 26981
40 1000	56000 47966	–	–
42 1050	60000 51392	52500 44968	–
48 1200	80000 68522	–	–

Note: Liquid media type, consult Velan for alternate media types.

Cv curve

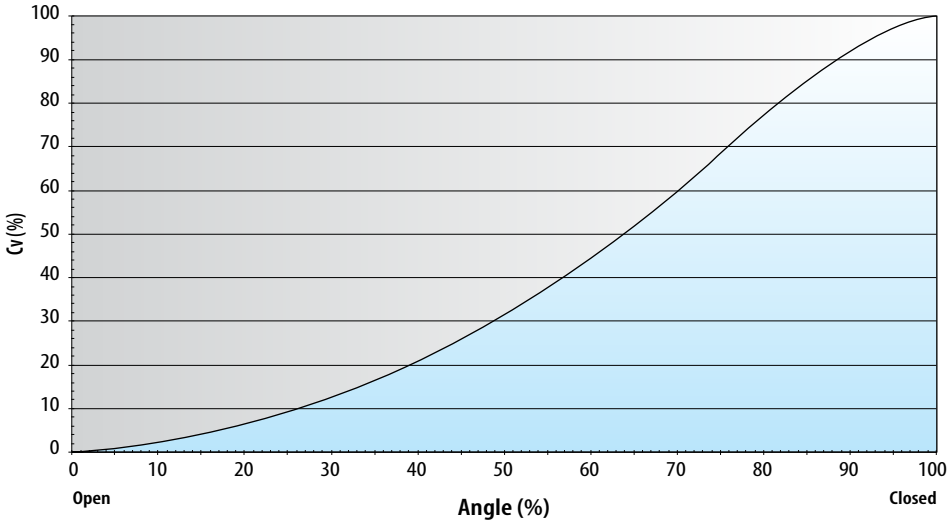

$$Q = C_V \sqrt{\frac{\Delta p}{G_L}}$$

Where:

Q = Flow in gpm (U.S. gallons per minute)

Δp = Pressure drop through the valve (psi)

G_L = Specific gravity (for water at 60°F = 1)

How to order Velan Torqseal 2.0 valves

Type of connection	Size of connection			Class/model number	Type	Seal ring	Body material			Bearing material	Disc material	Shaft material	Design	Standard compliance		Actuation	PED/CE
A	B			C	D	E	F			G	H	I	J	K		L	M
F	1	5	—	0	B	P	0	2	—	A	D	A	2	A	—	G	I

Example: NPS 8 (DN 200) flanged short pattern, 150 Class, carbon steel valve with graphite packing and NACE compliant shaft. Meeting API 609, API 598, API 6D capable (seat test only), PED/CE, Low-E 100 ppm, API 641/ISO FE, API 622, and API 607

A TYPE OF CONNECTION

B	Butt weld	P	Flanged B16.47 series B (API 605)
D	DIN flanges	R	Flanged ring joint
F	Flanged B16.5 (B16.47 series A)	U	Undrilled flanges
L	Lug	W	Wafer
M	Lug (series B)		

B SIZE OF CONNECTION

Sizes shown in NPS (DN)

10	3 (80)	16	10 (250)	22	20 (500)	30	30 (750)	42	42 (1050)	64	64 (1600)
12	4 (100)	18	12 (300)	23	22 (550)	32	32 (800)	48	44 (1200)	66	66 (1650)
13	5 (125)	19	14 (350)	24	24 (600)	34	34 (850)	54	54 (1350)	72	72 (1800)
14	6 (150)	20	16 (400)	26	26 (650)	36	36 (900)	56	56 (1400)	80	80 (2000)
15	8 (200)	21	18 (450)	28	28 (700)	40	40 (1000)	60	60 (1500)		

C CLASS/MODEL NUMBER

0	150	1	300	2	600

D TYPE

A	Long pattern – double flanged (API 609 Table 3B), ASME B16.10[1]
B	Short pattern – double flanged (API 609 Table 3C), ISO 5752, EN 558-2 and EN 593
C	Lug and wafer (API 609 Table 3A), MSS SP-68 (Table 2)
D	Short pattern – double flanged (API 609 Table 3C), ISO 5752 series 14[2], EN 558-2 and EN 593 or Butt weld Velan standard – face-to-face

E SEAL RING

A	SS 316 & Graphite	B	SS 410 & Graphite	P	Duplex & Graphite

F BODY MATERIAL[3]

02	A105, WCB	09	CrMo F9, C12	14	SS F316L, CF3M
04	CrMo F5, C5	13	SS F316, CF8M[4]	31	LCC

G BEARING MATERIAL[3]

A	SS Nitrided	D	SS chrome plated

H DISC MATERIAL[3]

A	Same as body – plated	C	SS 316, CF8M
B	Same as body – not plated	D	Same as body – coated

I SHAFT MATERIAL[3][5]

A	SS 410	D	SS 630 H1150D[6]	J	SS 660[7]

J DESIGN

2	2.0 design	N	Nuclear
H	Cryogenic	X	Custom design

K STANDARD COMPLIANCE

All Velan Torqseal 2.0 valves meet the following standards: API 609, API 598, API 6D capable[8] (hydrotest only), CE/PED, and Low-E 100 ppm. All supplied with NACE compliant shaft.

A	Graphite packing, also meets API 641/ISO FE[9], API 622, and API 607
B	PTFE packing
C	Graphite packing and Full NACE[10], also meets API 641/ISO FE[9], API 622, and API 607
D	PTFE packing and Full NACE[10]
E	Compliance to customer/Velan specifications

L ACTUATION

G	Gear operated	P	Pneumatic operated valve
B	Bare shaft	H	Hydraulic operated valve
M	Motor operated valve		

M PED/CE[11]

I	PED/CE mark

SPECIAL SERVICES/OPTIONS[12]

Block and bleed	Double packed with leak-off	Oxygen	API 6D tested

(1) The dimensions are in accordance with ASME B16.10 for flanged gate valves.

(2) Class 300 dimensions (API 609 Table 3C, Class 300[b] Column), NPS 30 and 36 (DN 750 and 900) available. Contact Velan for other sizes.

(3) Other materials are available upon request.

(4) Not suitable for temperatures above 1000°F (538°C).

(5) NACE compliant shaft.

(6) Not suitable for temperatures above 600°F (316°C).

(7) Suitable for temperatures up to 800°F (427°C).

(8) Hydrotest as per API 6D (five minute test only) available on request.

(9) Refer to product update document (PU-API 641). Up to NPS 24 (DN 600) 600 Class.

(10) Velan valves for NACE service (as indicated by figure number and/or description) comply with the metallurgical requirements of the current NACE MR0103 and MR0175 / ISO 15156. Material selection is dependent on the actual environment and it is therefore the equipment End User's responsibility to ensure that the materials are suitable for the intended service. Please contact Velan for any questions regarding the application of our products for NACE service.

(11) All TOV 2.0 designed valves are marked CE (European Conformity) and complies to PED (Pressure Equipment Directive) standard.

(12) Consult Velan for ordering instructions.

General information on how to order

- The figure numbers shown on this brochure are designed to cover essential features on Velan valves.
- Please use figure numbers to ensure prompt and accurate processing of your order.
- A detailed description must accompany any special orders.

Headquartered in Montreal, Canada, Velan has several international subsidiaries.
For general inquiries contact:

Velan head office:
7007 Côte de Liesse, Montreal, QC, H4T 1G2 Canada

Tel: +1 514 748 7743
Fax: +1 514 748 8635

www.velan.com